KV Controls (PTY) Ltd. Reg No: 2016/378940/07

KV CONTROLS

Control & Isolation Valves

Globe Control Valve

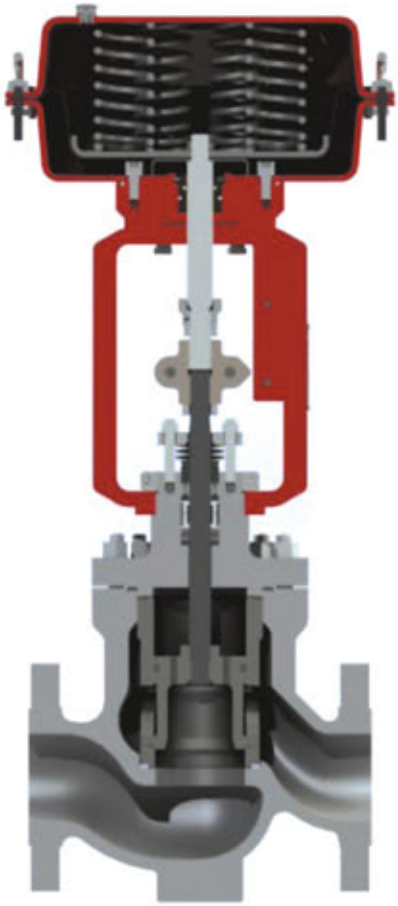

Linuo is a company with sense of social reliability and striving to be of contribution to the development of industrial automation by stabilizing the industrial automation control to a precise stage with dedication to the engineering and manufacturing of equipments used for industrial fluid control purpose.

Through over ten years of relentless evolvement of product, most of the demand from critical applications can be meet.Meanwhile,the quality management system ensures the reliability and durability of the products,acting as solid foundation to the stability of product.

- High flow capacity
- High flow rate rangeability
- Good control ability under low differential pressure at small opening
- Symmetrical casting globe valve body can withstand high stress from high pressure pipeline without risk of deformation
- Precise control of medium flow through the valve
- Optimized simple and smooth flow path

Content

Configuration of Control Valve

Valve body type

- Straight flow port+flanged connection
- Straight flow port +butt welding connection
- Angle flow port +flanged connection
- Angle flow port +butt welding connection
- Three way port +flanged connection
- Z port+flanged connection
- Z port +butt welding connection

Bonnet type

- Standard type
- High temperature type
- Extended bonnet for Low temperature
- Bellows seal type

Trim type

- Plug type
- Multistage plug type
- Standard cage type
- Single cage of low noise
- Double cage of low noise
- Single cage of low noise+cage of noise reduction
- Double cage of low noise+cage of noise reduction
- Labyrinth type
- Cage of multihole and multistage for pressure reduction
- Cage of multihole and multistage+cage of noise reduction

Seat Seal type

- Metal seated
- Soft seated

Actuator type

- Pneumatic diaphragm
- Pneumatic piston
- Electrodynamic
- Elerctro-Hydraulic

Accessories

- Positioner
- Air filter
- Solenoid valve
- Position transmitter
- Limit switches
- Air control valve
- Lock-up valve
- Three fault protection device
- Hand wheel
- Companion flange

Remark:

- Above guidance of configuration is referring to straight flow port control valve. Construction selection can be made as per specific application requirements.
- The above configuration covers only part of important parts.
- Please follow the page numbers shown in P for the content required.
- Detailed information about electric actuator, electro-hydraulic actuator and related accessories is not included in this catalogue, please consult engineer of LINUO for detailed specifications.
- The maximum allowable differential pressure value of the actuator of control valve and other detailed performance specification is not specified in this catalogue. Please consult the engineer of Linuo for proper selection and sizing of control valve.

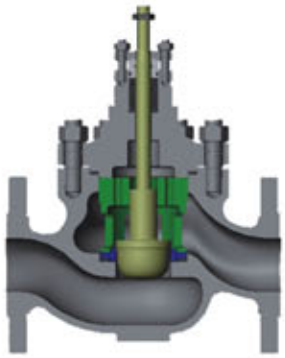

❶ Straight Flow Port

The s-shaped straight flow port is with smooth internal wall to provide high flow capacity ,low pressure loss and stable flow movement.

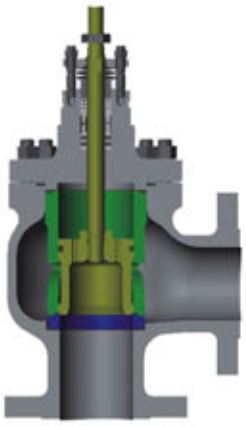

❷ Angle Flow Port

The angle flow port is with completely the same feature as straight flow port except that the port is at an right angle.It is suitable for applications of high viscosity subject to slagging and clogging.

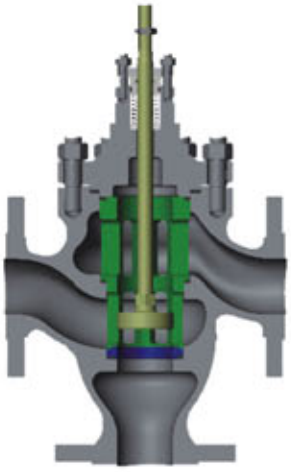

❸ Three-way Port

Three-way port valve is with three flow ports for the purpose of converging and diverging. It is mainly used for regulation of medium of two phase or different proportions , where it can help to save the installation space as well as cost.

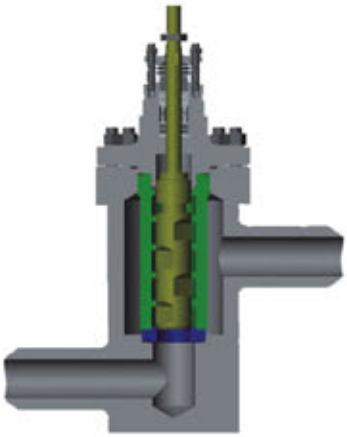

❹ Z-port

Z port is normally forged with good pressure resistance. It features with high allowable differential pressure,low noise, stable performance, which can effectively prevent flashing and cavitation.

❶ Standard

Standard bonnet is for service under ambient temperature.Bonnet is in the same material as valve body,functioning as both closure of body and connector with actuator.

Applicable Temperature: -20℃~+230℃

❷ High Temperature

High temperature type bonnet is designed for high temperature application with protection of packing and actuator by increasing the cooling area.

Applicable Temperature: -45℃--20℃
Higher than +230℃

❸ Extended Bonnet for Low Temperature

Extended bonnet for low temperature is for low temperature application with medium such as liquid oxygen, liquid nitrogen. This type bonnet is able to protect the packing and actuator effectively by extension in the bonnet height. The standard material is SS304 and SS316. Other materials are also available as per application requirements.

Applicable temperature: -196℃~-45℃

❹ Bellows Seal

Metal bellows seal bonnet is installed inside With stainless steel bellows components to completely isolate the medium from ambient,meanwhile,the smooth movement of stem is maintained. In addition, there is still stuffing box inside bonnet to prevent the waste or pollution caused by emission of medium.

Applicable temperature: -60℃~+530℃

High Temperature

When selecting a material for service under high temperature, the variation of strength, microstructure and corrosion resistance of material under high temperature shall be fully considered.N ormally alloy steel materials containing chromium.nickel,molybdenum elements are required for this application. Additionally, under the high temperature and pressure, there would be decarburization occurring to steel by the erosion of hydrogen with the result of embrittlement. With steel containing chromium, nickel, molybdenum elements which combine with carbon, resistance to hydrogen embrittlement is improved with higher corrosion resistance.

Low Temperature

When selecting a material for service under low temperature .apart from the impact strength of material under the service temperature should be considered, also should be careful with the risk of brittleness by dropping of toughness under low temperature. So enough toughness is a must for the materials used under low temperature conditions. Valve will be safe and reliable only in materials qualified for the impact testing as per standard.

Cavitation Resistance

As valve is easily subject to flash, cavitation In high pressure application, body material resistant to cavitation shall be selected. In general, there are 3 types of suitable material as following:

a)Material with high strength by heat treatment.

b)Material with strong oxidation layer, high toughness and high fatigue resistance by enhancing the surface hardness of materials with heat treatment.

c)Material with partial hardening treatment such as overlaying welding.

Corrosion Resistance

Corrosion of metal material is classified into general corrosion,crevice corrosion,intergranular corrosion,pitting corrosion and stress corrosion etc.In fact, the fluid type, concentration, temperature, as well as the containment of antioxidant and velocity are also among the factors leading to corrosion. Main corrosion resistant materials used are PTFE, F46 lining as economical alternative or austenitic stainless steel,20# steel.Hastalloy B,Hastalloy C,titanium alloy of much higher expense.

Pressure and Temperature Range of Various Body Material as per

ASME 16.34 (MPa G)

	Class150						Class 300						Class 600					
Temp	SCPL1	SCPH2	SCPH21	SCPH61	SCS13A	SCS14A	SCPL1	SCPH2	SCPH21	SCPH61	SCS13A	SCS14A	SCPL1	SCPH2	SCPH21	SCPH61	SCS13A	SCS14A
℃	LCB	WCB	WC6	C5	CF8	CF8M	LCB	WCB	WC6	C5	CF8	CF8M	LCB	WCB	WC6	C5	CF8	CF8M
-196~38	/	/	/	/	1.90	1.90	/	/	/	/	4.95	4.95	/	/	/	/	9.91	9.92
-45~38	1.84	/	/	/	1.90	1.90	4.78	/	/	/	4.95	4.95	9.57	/	/	/	9.91	9.92
-5~38	1.84	1.96	1.99	1.99	1.90	1.90	4.78	5.10	5.16	5.18	4.95	4.95	9.57	10.20	10.32	10.32	9.91	9.92
50	1.81	1.92	1.92	1.92	1.84	1.84	4.72	5.00	5.10	5.18	4.77	4.80	9.48	10.01	10.22	10.32	9.56	9.82
100	1.72	1.76	1.76	1.76	1.56	1.61	4.51	4.63	4.88	5.14	4.08	4.21	9.02	9.27	9.74	10.29	8.17	8.43
150	1.57	1.57	1.57	1.57	1.39	1.47	4.40	4.51	4.63	5.01	3.62	3.85	8.78	9.04	9.26	10.03	7.26	7.69
200	1.40	1.40	1.40	1.40	1.25	1.37	4.26	4.38	4.54	4.88	3.27	3.56	8.54	8.75	9.09	9.75	6.54	7.12
250	1.20	1.20	1.20	1.20	1.16	1.20	4.05	4.16	4.44	4.82	3.04	3.34	8.11	8.33	8.88	9.26	8.10	8.87
300	1.01	1.01	1.01	1.01	1.01	1.01	3.76	3.87	4.23	4.23	2.91	3.15	7.54	7.74	8.48	8.48	5.80	8.32
350	0.84	0.84	0.84	0.84	0.84	0.84	3.59	3.69	4.01	4.01	2.81	3.03	7.18	7.38	8.04	8.04	5.60	6.07
375	/	0.73	0.73	0.73	0.73	0.73	/	3.64	3.88	3.88	2.77	2.96	/	7.28	7.75	7.75	5.54	5.93
400	/	0.64	0.64	0.64	0.64	0.64	/	3.44	3.65	3.65	2.74	2.91	/	6.89	7.31	7.31	5.48	5.81
425	/	0.55	0.55	0.55	0.55	0.55	/	2.88	3.50	3.44	2.71	2.87	/	5.74	7.01	6.91	5.42	5.72
450	/	0.47	0.47	0.47	0.47	0.47	/	1.99	3.38	3.08	2.68	2.81	/	4.00	8.75	6.17	5.37	5.61
475	/	0.37	0.37	0.37	0.37	0.37	/	1.35	3.16	2.58	2.65	2.73	/	2.70	6.32	5.17	5.30	5.46
500	/	0.28	0.28	0.28	0.28	0.28	/	0.88	2.77	2.02	2.60	2.67	/	1.75	5.55	4.04	5.20	5.37
525	/	0.18	0.18	0.18	0.18	0.18	/	0.51	2.02	1.53	2.19	2.57	/	1.03	4.04	3.07	4.77	5.15
538	/	0.13	0.15	0.15	0.15	0.15	/	0.34	1.63	1.34	2.18	2.53	/	0.72	3.28	2.89	4.55	5.08

GB/T9113-2010 & HG/T20592-2009(MPa G)

Temp	PN 16	PN 40	PN 63	PN 100
℃	ZG230-450			
-45~200	1.60	4.00	6.30	10.00
-300	1.40	3.50	5.40	9.00
-400	1.20	3.00	4.80	7.50
-480	1.10	2.60	4.00	6.60
-520	0.90	2.30	3.70	5.80
-560	0.80	2.00	3.20	5.00

Temp	PN 16	PN 40	PN 63	PN 100
℃	ZG230-450			
-5~200	1.60	4.00	6.30	10.00
-250	1.40	3.50	5.40	9.00
-300	1.20	3.00	4.80	7.50
-350	1.10	2.60	4.00	6.60
-400	0.90	2.30	3.70	5.80
-425	0.80	2.00	3.20	5.00
-435	0.70	1.80	2.80	4.50
-445	0.62	1.60	2.50	4.20
-455	0.57	1.40	2.30	3.60

Main Materials Used for Key Parts

Part	Material
Body/Bonnet	LCB、WCB、WC6、WC9、CF8、CF8M、CF3、CF3M
Seat	304、316、304L、316L、410、17-4PH、Monel Alloy、Hastelloy Alloy
Plug/Cage	CF8、CF8M、CF3、CF3M、410、17-4PH
Stem	304、316、304L、316L、420、17-4PH

Remark: Special material is available as per requirement

Material normally used for trim parts includes 304,316,304L,316L,410.420,17-4PH etc. which will be heat treated as per different working condition.Hardening treatment shall be conducted for materials serving fluid containing solid particles and application of high temperature and pressure in order to achieve long enough service life.

Main heat treatments are as following:

Austenitic stainless steel 304,316

Solid solution treatment shall be taken for enhancing hardness and corrosion resistance for service temperature -196℃~+530℃.

Martensitic stainless steel 410,420

Martensite stainless steel is a good material for cavitation resistant after quenched and tempered with enhanced hardness for good service life under harsh conditions.

Applicable temperature range is -45℃~+425℃

Precipitation-Hardening Stainless Steel 17-4PH

17-4PH shall be treated with precipitation hardening,which precipitates carbide,nitride,carbon nitrides and intermetalliccompound of different type and amount to maintain sufficient toughness meanwhile enhances the strength of steel by adding reinforcement element of different type and quantity on the basis of chemical composition of stainless steel.

Applicable temperature range :-45℃~+425℃.

Main surface hardening treatments are as following:

1.Surface quenching is available by fire inflammation,electric heating,induction heating.

2.Surface heat treatment by chemical includes carburizing,nitriding, carbonitriding, boronizing,chromizing, spray welding etc.

Overlaying weldings are available as following:

Stellite surfacing (main compositions are Co Cr W) is with excellent corrosion resistance and commonly used for hardening treatment.It is available with.

1.Full welding

2.Partial welding

Partial welding on sealing face of plug

Full welding of entire plug

Partial welding on seating areas

Full welding of entire seat

Gasket is used to seal the gap existing the metal to metal contact between bonnet and body, seat and body to ensure the sealing. Gasket between bonnet and body is pretightened for sealing by the bonnet bolts. The seat tightness can only be ensured when the gasket between seat and body is properly compressed by the stress transmitted through cage at the time of completion of assembly of bonnet. The tolerance of bonnet height controls compression of gasket within the allowable range ensuring reliable tightness and protecting the gasket from failure by being over pretightened.

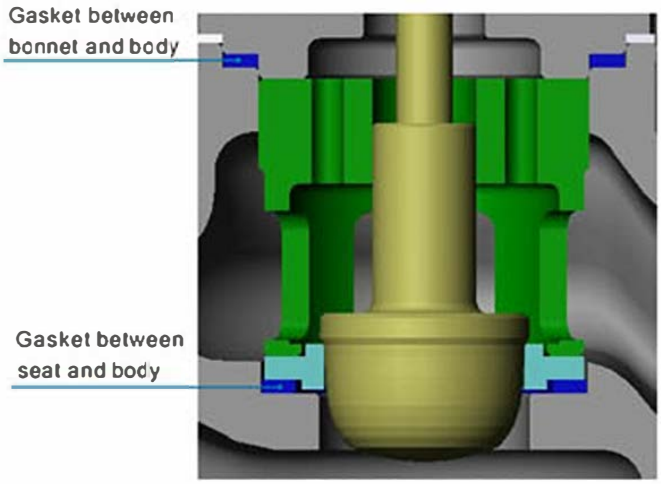

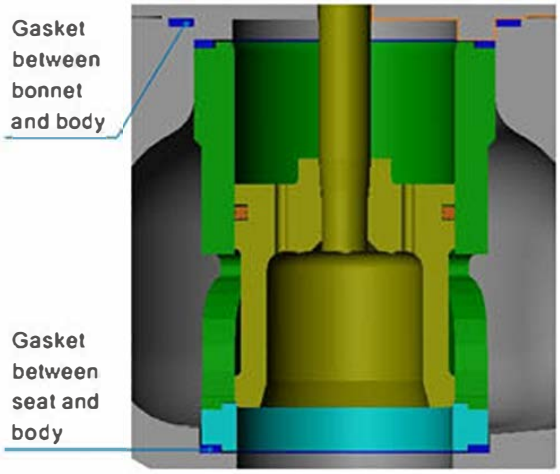

Applicable Temperature Range of Gasket

Type	Material	Temperature Range
Spiral Wound Gasket	304/ 316+Flexible Graphite	-196℃~+500℃
Serrated Gasket	304/ 316	-196℃~+500℃
Flat Gasket	improved PTFE	-150℃~+230℃

Remark: Gasket in special material is available for higher temperature application.

Flow Characteristics

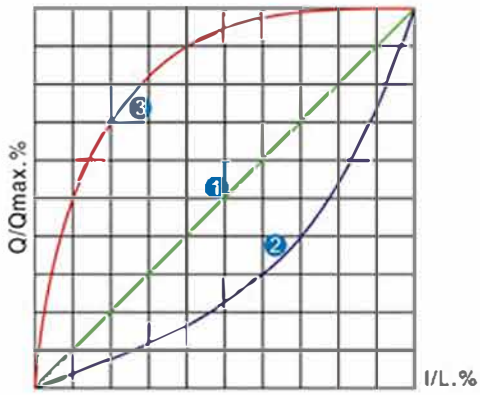

The flow characteristics is defined as the relation between the relative flow rate of incompressible fluid through valve and relative opening degree of valve under the condition that the differential pressure is certain.
Typical flow characteristics are linear,equal percentage and quick opening.

❶ Linear

The relation between relative flow rate through valve and relative opening degree of valve is presenting as linear which means which variation of flow rate caused by per unit of variation of travel is a constant.

❷ Equal Percentage

It is also called logarithmic flow characteristic. The relation between relative flow rate through valve and relative opening degree of valve is presenting as direct proportion, which means which the percentage of variation of flow rate caused by per unit of variation of travel is a constant.

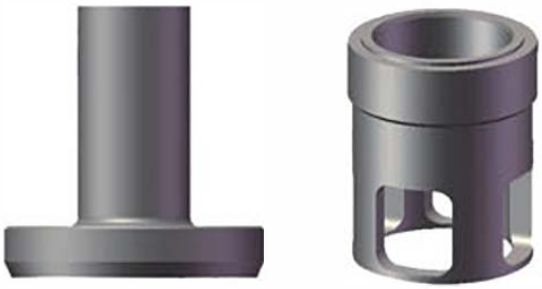

❸ Quick Opening

Flow rate is already quite high even at small opening degree and the flow rate reaches the full capacity very quickly with increasing of opening.

Sealing ring is key teochnology for sealing of Cage guided globe control valve

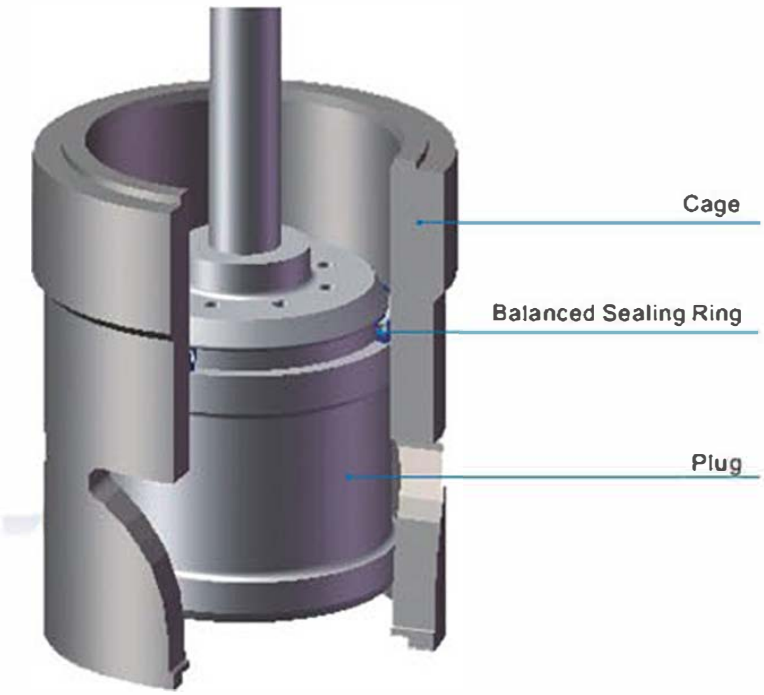

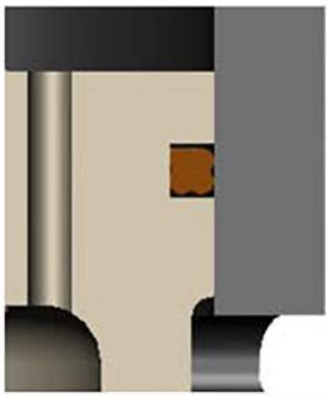

1

2

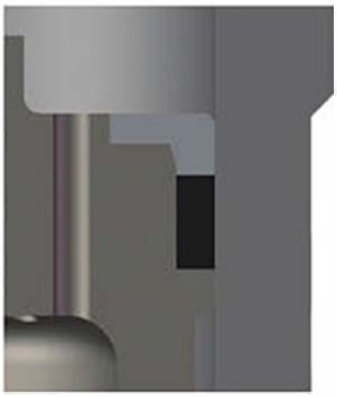

3

Balanced Sealing Ring Construction

The balanced sealing ring is in various styles as per application requirements.

❶ Star-shaped

It's also called X shaped sealing ring.
It's a rubber sealing ring with four lip sealing for bi-directional tightness.
Sealing is achieved by squeezing
Applicable temperature range :20℃~+150℃
Tightness class :ASME B16.104 classV
Advantage: It is with low radial stress and friction without being distorted or rolled during back and forth movement, therefore, long lifecycle is ensured. Uniform distribution of pressure on cross section offers good sealing. Splitting face of mold is located between two lips without risk of failure caused by flashes.Capacity between two lips serves as good lubrication for the start up.

❷ Spring insertion

This is a high performance sealing ring.
Specially engineered spring is encapsulated by U shaped PTFE to generate superior sealing performance by pushing the lip slightly to sealing face with the stress of spring and pressure of fluid.
Sealing is achieved by self sealing by pressure.
Applicable temperature range :-30℃~+250℃
Tightness class :ASME B16.104 classV
Advantage :It is applicable for both linear and rotary motion with low friction. No creeping under precise control prevents dead zone.It's also with very good abrasion resistance and dimension stability, making it very reliable for toxic medium by the prevention of emission.

❸ Composite graphite sealing ring

Flexible graphite is also called expanded graphite, a intercalated compound made from raw material of squama graphite.The good sealing performance is achieved by eliminating brittleness under the temperature 800-1000℃ when the squama graphite expands for about two hundred times and intercalated compound is gasified.
Sealing is achieved by squeezing.
Applicable temperature range :-196℃~+550℃
Tightness class :ASME B16.104 classIV
Advantage :In addition to the good performance of high temperature resistance, corrosion resistance, self-lubrication, it is also with good softness, rebound elasticity, plasticity, impermeability, self-adhesive, low density and anisotropy,achieving very stable chemical performance without risk of decomposing, deformation or aging under high temperature, pressure or radiation. Metal wire in different material could be added into flexible graphite to fit for high temperature application.

❶ Flanged

Face to Face Standard: IEC20534-3-4
Flanged Standard: GB、HB、JB、JIS、ASME、DIN
Flanged Face Type: RF、FM、TG、RTJ
Size Range:3/4"~20"

❷ Butted Welding

Welding groove dimension as per ASME B16.25
DN: 2"~20"

❸ Socket Welding

Welding end dimensions as per ASME B16.11
DN: 1/2"~2"

❹ Threaded

Threaded standard as per BSP、NPT、BSPT、ZG etc.
DN: 1/2"~2"

Features

- Top guided plug with contoured smooth flow face offers good flow capacity, high precision, meanwhile, flow pressure is resumable .
- It is suitable for applications with low differential pressure.
- Seat is designed for sealing by pressing offering easy maintenance as it can be taken out for repair or replacement from top of body.
- Each valve size is designed with various Cv value trim.
- Soft seated trim can meet applications calling for emergency shut off with good tightness.
- Good controllability at small opening and good stability of flow characterizes.
- Special designed trim is available to meet requirements of application for noise reduction or cavitation resistance.

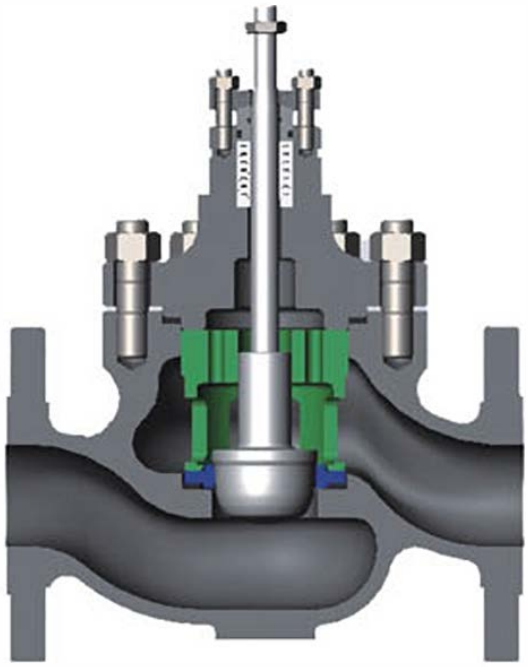

PP Series Standard Type

Specifications

DN	1/2"—8"
PN	ANSI150#—1500#
Rangeability	50:1
Body	Straight flow port type, Angle flow port Type
Bonnet	Standard, High-Temperature, Low-Temperature
Stem Sealing	Packing, Bellows
Applicable Temperature	-196℃~+550℃
Flow Characteristic	Equal Percentage, Linear, Quick Opening
Tightness Class	ANSI FCI 70-2 class IV (Metal Seat) ANSI FCI 70-2 class VI (Soft Seat for On-Off)
Actuator	Pneumatic Diaphragm Type, Pneumatic Piston Type, Electric Type

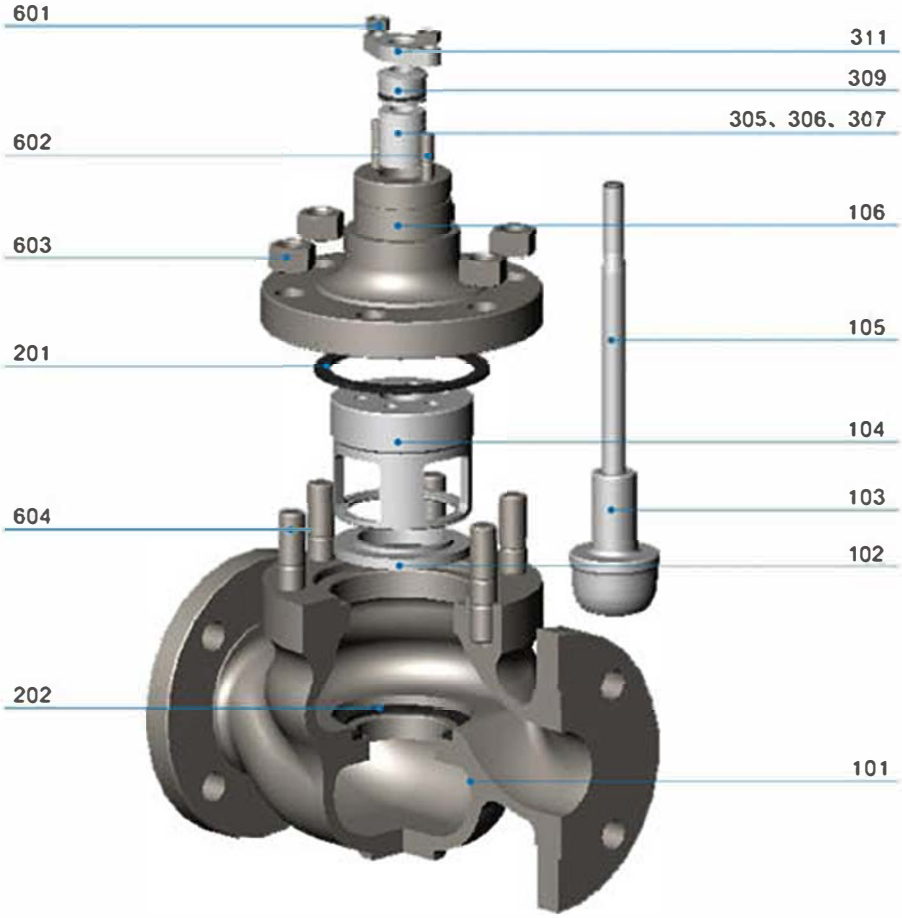

PP Series Standard Type

No.	Part
101	Body
102	Seat
103	Plug
104	Cage
105	Stem
106	Bonnet
201	Gasket
202	Gasket
305	Packing
306	Packing
307	Packing
309	Packing Sleeve
311	Gland
601	Nut
602	Bolt
603	Nut
604	Bolt

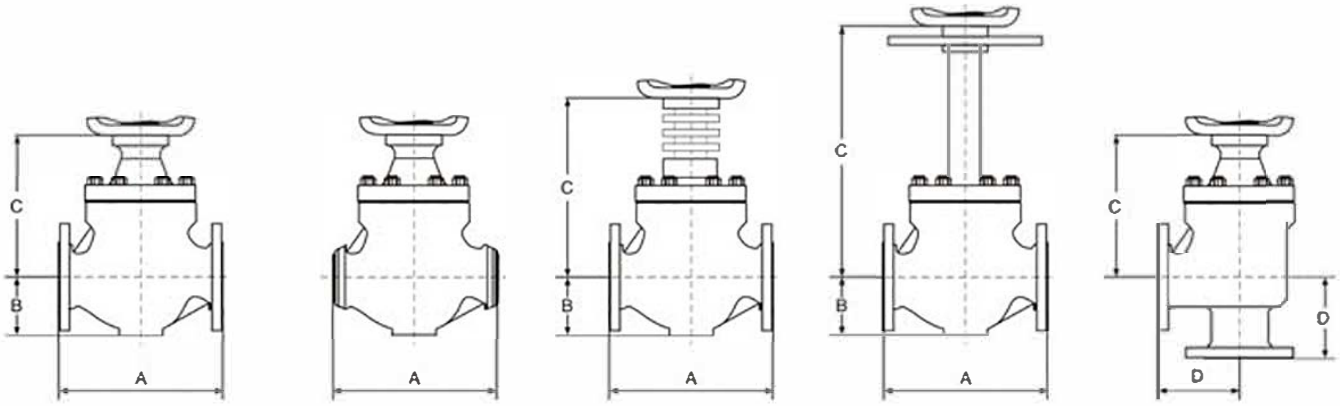

Outline Dimensions of Globe Control Valve—PP Series

Size inch (mm)	A(mm)												
	ANSI Class150 (PN20)	ANSI Class300 (PN50)			ANSI Class600 (PN100)			ANSI Class900 (PN150)			ANSI Class1500 (PN250)		
	RF	RF	RTJ	BW SW THD	RF	RTJ	BW SW THD	RF	RTJ	BW SW THD	RF	RTJ	BW SW THD
1/2"(15A)	184	194	206	206	206	206	206	/	/	/	/	/	/
3/4"(20A)	184	194	206	206	206	206	206	/	/	/	/	/	/
1"(25A)	184	197	210	210	210	210	210	/	/	/	/	/	/
1 1/4"(32A)	200	210	215	220	220	220	220	/	/	/	/	/	/
1 1/2"(40A)	222	235	248	251	251	251	251	333	333	333	333	333	333
2"(50A)	254	267	283	286	286	289	286	375	378	375	375	378	375
2 1/2"(65A)	276	292	308	311	311	314	311	410	415	410	410	415	410
3"(80A)	298	317	333	317	337	340	337	440	443	440	480	463	460
4"(100A)	352	368	384	368	394	397	394	510	513	510	530	533	530
5"(125A)	410	425	441	425	460	463	460	575	578	575	600	605	600
6"(150A)	451	473	489	473	508	511	508	715	718	715	770	776	770
8"(200A)	543	568	584	568	610	613	610	854	857	854	911	920	911

Size inch (mm)	B	C(mm)						D(mm)				
		Straight Flow Port Type			Angle Flow Port Type			ANSI Class150 (PN20)	ANSI Class300 (PN50)	ANSI Class600 (PN100)	ANSI Class900 (PN150)	ANSI Class1500 (PN250)
		Standard	Low Temperature	High Temp	Standard	Low Temperature	High Temp					
1/2"(15A)	52	131	1226	268	125	1301	280	95	95	95	115	115
3/4"(20A)	52	131	1226	266	125	1301	260	95	95	95	115	115
1"(25A)	52	131	1226	266	125	1301	260	92	98	105	125	125
1 1/4"(32A)	55	146	1226	281	140	1301	275	111	117	125	135	153
1 1/2"(40A)	66	170	1246	303	149	1329	319	111	117	125	155	165
2"(50A)	76	177	1246	312	159	1354	326	127	133	143	180	200
2 1/2"(65A)	93	218	1367	343	188	1517	388	138	146	156	220	220
3"(80A)	110	225	1519	350	194	1517	394	149	159	168	250	250
4"(100A)	125	233	1519	358	234	1517	413	176	184	197	300	300
5"(125A)	150	285	1536	440	270	1615	527	200	215	225	350	350
6"(150A)	170	300	1536	445	294	1615	554	225	236	254	410	410
8"(200A)	200	334	1536	489	331	1615	591	272	284	305	550	550

Rated CV and Travel of Single Seated Globe Control Valve-PP Series

Flow Characteristic: Linear

Travel Percentage		10	20	30	40	50	60	70	80	90	100
FL		0.94	0.94	0.93	0.93	0.92	0.92	0.91	0.91	0.90	0.90
Size(inch/mm)	Travel	Rated Cv									
		0.12	0.22	0.31	0.41	0.51	0.61	0.71	0.80	0.90	1
1/2"(15A)	14.3	0.24	0.43	0.63	0.82	1.02	1.22	1.41	1.61	1.80	2
		0.52	0.95	1.38	1.81	2.24	2.68	3.11	3.54	3.97	4.4
3/4"(20A)	14.3	0.74	1.36	1.98	2.60	3.21	3.83	4.45	5.07	5.68	6.3
1"(25A)	14.3	1.18	2.16	3.14	4.12	5.10	6.08	7.06	8.04	9.02	10
1 1/4"(32A)	25	2.00	3.67	5.34	7.00	8.67	10.3	12.0	13.7	15.3	17
1 1/2"(40A)	25	2.83	5.18	7.54	9.89	12.2	14.6	16.9	19.3	21.6	24
2"(50A)	25	5.19	9.50	13.8	18.1	22.4	26.8	31.1	35.4	39.7	44
2 1/2"(65A)	38	8.02	14.7	21.4	28.0	34.7	41.3	48.0	54.7	61.3	68
3"(80A)	38	11.7	21.4	31.1	40.8	50.5	60.2	69.9	79.6	89.3	99
4"(100A)	38	20.7	37.8	55.0	72.1	89.2	106	124	141	158	175
5"(125A)	50	35.4	64.8	94.2	124	153	182	212	241	271	300
6"(150A)	50	42.5	77.8	113	148	184	219	254	289	325	360
8"(200A)	75	75.5	138	201	264	326	389	452	515	577	640

Flow Characteristic: Equal Percentage

Travel Percentage		10	20	30	40	50	60	70	80	90	100
FL		0.94	0.94	0.93	0.93	0.92	0.92	0.91	0.91	0.90	0.90
Size(inch/mm)	Travel	Rated Cv									
		0.03	0.04	0.06	0.10	0.14	0.21	0.31	0.46	0.68	1
1/2"(15A)	14.3	0.06	0.08	0.12	0.19	0.28	0.41	0.61	0.91	1.35	2
		0.13	0.19	0.28	0.42	0.62	0.92	1.36	2.01	2.98	4.4
3/4"(20A)	14.3	0.19	0.28	0.41	0.60	0.89	1.32	1.95	2.88	4.26	6.3
1"(25A)	14.3	0.30	0.44	0.65	0.96	1.41	2.09	3.09	4.57	6.76	10
1 1/4"(32A)	25	0.50	0.74	1.10	1.63	2.40	3.55	5.26	7.77	11.5	17
1 1/2"(40A)	25	0.71	1.05	1.55	2.29	3.39	5.02	7.42	11.0	16.2	24
2"(50A)	25	1.30	1.92	2.85	4.21	6.22	9.20	13.6	211	29.8	44
2 1/2"(65A)	38	2.01	2.97	4.40	6.50	9.62	14.2	21.0	31.1	46.0	68
3"(80A)	38	2.93	4.33	6.41	9.46	14.0	20.7	30.6	45.3	66.9	99
4"(100A)	38	5.18	7.65	11.3	16.7	24.7	36.6	54.1	80.0	118	175
5"(125A)	50	8.88	13.1	19.4	28.7	42.4	62.7	92.8	137	203	300
6"(150A)	50	10.7	15.7	23.3	34.4	50.9	75.3	111	165	243	360
8"(200A)	75	18.9	28.0	41.4	61.2	90.5	134	198	293	433	640

Feature

- Good stability with cage guided trim of large guiding area.
- High control precision with flow ports on cage allowing medium to go through and pressure is resumable.
- It is suitable for application with high differential pressure.
- Easy maintenance with compact trim design, allowing parts taken out of body directly from top.
- Emergency shut off requirement can be meet with soft seated design with good tightness .
- Trims of various designs are available, including single stage, multi-hole, multistage, low noise, cavitation resistance etc.
- Various noise control parts are available including silencer and dynamic attenuator etc.

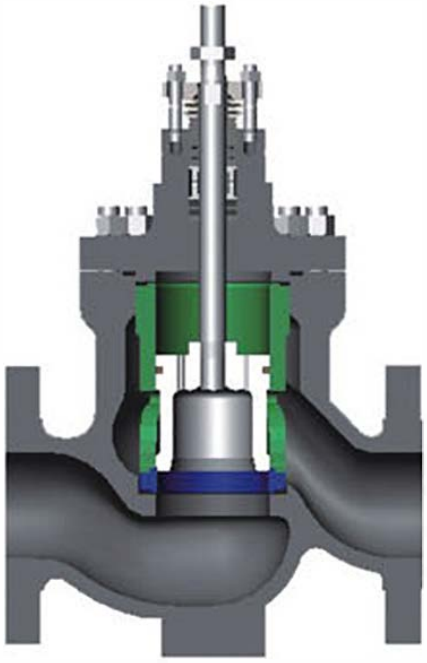

PM Series-Standard Type

Specifications

DN	1 1/2"-20"
PN	ANSI 150#—2500#
Rangeability	50:1
Body	Sraight Flow Port Type, Angle Flow Port Type, Z Flow Port Type
Bonnet	Standard, High-Temperature, Low-Temperature
Stem Sealing	Packing, Bellows
Applicable Temperature	-196℃~+550℃
Flow Characteristic	Equal Percentage, Linear, Quick Opening
Tightness Class	ANSI FCI 70-2 class IV (Metal Seat) ANSI FCI 70-2 class VI (Soft Seat)
Actuator	Pneumatic Diaphragm Type, Pneumatic Piston Type, Electric Type

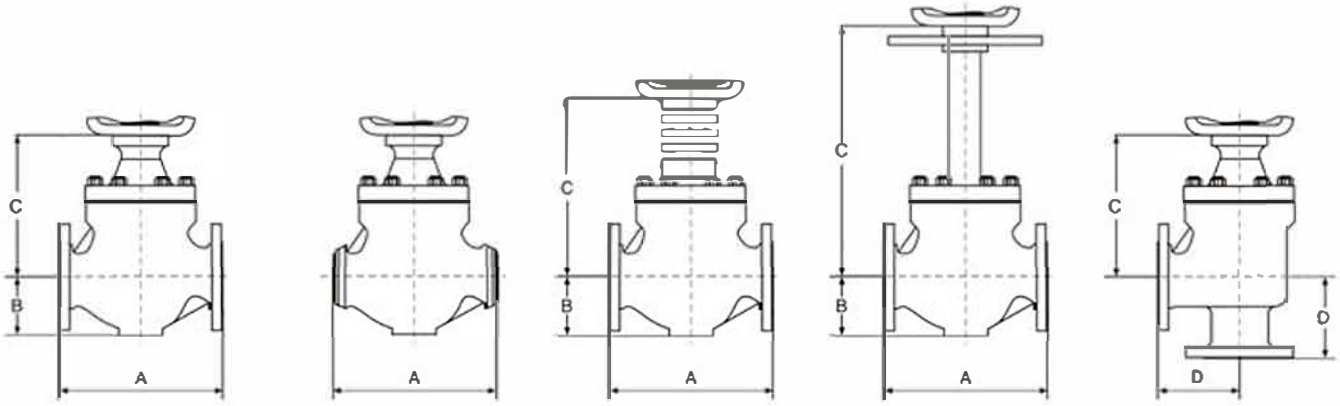

Outline Dimensions of Cage Guided Globe Control Valve—PM Series

Size inch (mm)	A(mm)															
	ANSI Class150 (PN20)	ANSI Class300 (PN50)			ANSI Class600 (PN100)			ANSI Class900 (PN150)			ANSI Class1500 (PN250)			ANSI Class2500 (PN420)		
	RF	RF	RTJ	BW SW THD	RF	RTJ	BW SW THD	RF	RTJ	BW SW THD	RF	RTJ	BW SW THD	RF	RTJ	BW SW THD
1"(25A)	184	197	210	210	210	210	210	/	/	/	/	/	/	/	/	/
1 1/4"(32A)	200	210	215	215	220	220	220	/	/	/	/	/	/	/	/	/
1 1/2"(40A)	222	235	248	251	251	251	251	333	333	333	333	333	333	358	361	358
2"(50A)	254	267	283	286	286	289	286	375	378	375	375	378	375	437	440	437
2 1/2"(65A)	276	292	308	311	311	314	311	410	415	410	410	415	410	442	448	442
3"(80A)	298	317	333	317	337	340	337	440	443	440	460	463	460	498	505	498
4"(100A)	352	368	384	368	394	397	394	510	513	510	530	533	530	566	575	566
5"(125A)	410	425	441	425	460	463	460	575	578	575	600	605	600	640	652	640
6"(150A)	451	473	489	473	508	511	508	715	718	715	770	776	770	820	833	820
8"(200A)	543	568	584	568	610	613	610	854	857	854	911	920	911	1279	1295	1279
10"(250A)	673	708	724	708	752	756	752	1251	1254	1251	1327	1336	1327	1778	1800	1778
12"(300A)	737	775	791	775	819	822	819	1311	1314	1311	1400	1416	1400	/	/	/
14"(350A)	889	927	943	927	972	975	972	/	/	/	/	/	/	/	/	/
16"(400A)	1016	1057	1073	1057	1108	1111	1108	/	/	/	/	/	/	/	/	/
18"(450A)	1137	1190	1202	1202	1308	1320	1320	/	/	/	/	/	/	/	/	/
20"(500A)	1662	1704	1722	1722	1767	1773	1773	/	/	/	/	/	/	/	/	/

Outline Dimensions of Cage Guided Globe Control Valve—PM Series

Size inch (mm)	B	C(mm)						D(mm)					
		Straight Flow Port Type			Angle Flow Port Type			ANSI	ANSI	ANSI	ANSI	ANSI	ANSI
		Standard	Low Temperature	High Temp	Standard	Low Temperature	High Temp	Class150 (PN20)	Class300 (PN50)	Class600 (PN100)	Class900 (PN150)	Class1500 (PN250)	Class2500 (PN420)
1"(25A)	62	131	1226	266	125	1301	260	92	98	105	125	125	150
1 1/4"(32A)	65	146	1226	281	140	1301	275	111	117	125	135	153	170
1 1/2"(40A)	76	170	1246	303	149	1329	319	111	117	125	190	190	190
2"(50A)	95	177	1246	312	159	1354	326	127	133	143	230	230	230
2 1/2"(65A)	100	218	1367	343	188	1517	388	138	146	156	270	270	340
3"(80A)	115	225	1519	350	194	1517	394	149	159	168	300	300	420
4"(100A)	140	233	1519	358	234	1517	413	176	184	197	400	400	435
5"(125A)	168	285	1536	440	270	1615	527	200	215	225	450	450	470
6"(150A)	190	300	1536	445	294	1615	554	225	236	254	510	510	520
8"(200A)	200	334	1536	489	331	1615	591	272	284	305	675	675	835
10"(250A)	230	440	1940	640	440	1940	640	337	354	376	/	/	/
12"(300A)	340	450	1950	650	450	1950	650	368	387	410	/	/	/
14"(350A)	400	550	2050	800	550	2050	800	445	464	486	/	/	/
16"(400A)	450	560	2060	910	560	2060	910	508	529	554	/	/	/
18"(450A)	530	700	2400	1010	700	2400	1010	/	/	/	/	/	/
20"(500A)	680	720	2420	1030	720	2420	1030	/	/	/	/	/	/

Rated CV and Travel of Cage Guided Globe Control Valve—PM Series

PM Standard Series

Flow Characteristic: Linear

Travel Percentage		10	20	30	40	50	60	70	80	90	100
FL		0.94	0.94	0.93	0.93	0.92	0.92	0.91	0.91	0.90	0.90
Size(inch/mm)	Travel	Rated Cv									
1"(25A)	20	2.24	4.10	5.97	7.83	9.69	11.5	13.4	15.3	17.1	19
1 1/4"(32A)	25	3.30	6.05	8.79	11.5	14.3	17.0	19.8	22.5	25.3	28
1 1/2"(40A)	25	4.72	8.64	12.6	16.5	20.4	24.3	28.2	32.2	36.1	40
2"(50A)	25	9.67	14.0	20.4	26.8	33.2	39.5	45.9	52.3	58.6	65
2 1/2"(65A)	50	11.8	21.6	31.4	41.2	51.0	60.8	70.6	80.4	90.2	100
3"(80A)	50	14.8	27.0	39.3	51.5	63.8	76.0	88.3	101	113	125
4"(100A)	50	26.0	47.5	69.1	90.6	112	134	155	177	198	220
5"(125A)	60	37.2	68.0	98.9	130	161	192	222	253	284	315
6"(150A)	60	51.9	95.0	138	181	224	238	311	354	397	440
8"(200A)	75	89.1	163	237	311	385	459	533	607	681	755
10"(250A)	100	123.9	227	330	433	536	638	741	844	947	1050
12"(300A)	100	165.2	302	440	577	714	851	988	1126	1263	1400
14"(350A)	150	224.2	410	597	783	969	1155	1341	1528	1714	1900
16"(400A)	150	236	432	628	824	1020	1216	1412	1608	1804	2000
18"(450A)	200	289	529	769	1009	1250	1490	1730	1970	2210	2450
20"(500A)	200	342	626	911	1195	1479	1763	2047	2332	2616	2900

PM Standard Series

Flow Characteristic: Equal Percentage

Travel Percentage		10	20	30	40	50	60	70	80	90	100
FL		0.94	0.94	0.93	0.93	0.92	0.92	0.91	0.91	0.90	0.90
Size(inch/mm)	Travel	Rated Cv									
1"(25A)	20	0.47	0.70	1.04	1.53	2.26	3.35	4.95	7.32	10.8	16
1 1/4"(32A)	25	0.71	1.05	1.55	2.29	3.39	5.02	7.42	11.0	16.2	24
1 1/2"(40A)	25	1.07	1.57	2.33	3.44	5.09	7.53	11.1	16.5	24.3	36
2"(50A)	25	1.57	2.32	3.43	5.07	7.49	11.1	16.4	24.2	35.8	53
2 1/2"(65A)	50	2.51	3.71	5.50	8.13	12.0	17.8	26.3	38.9	57.5	85
3"(80A)	50	3.26	4.81	7.12	10.5	15.6	23.0	34.0	50.3	74.4	110
4"(100A)	50	5.92	8.74	12.9	19.1	28.3	41.8	61.8	91.5	135	200
5"(125A)	60	8.29	12.2	18.1	26.8	39.6	58.5	86.6	128	189	280
6"(150A)	60	12.4	18.4	27.2	40.2	59.4	87.8	130	192	284	420
8"(200A)	75	20.4	30.2	44.6	66.0	97.6	144	213	316	467	690
10"(250A)	100	28.1	41.5	61.5	90.8	134	199	294	434	642	950
12"(300A)	100	38.5	56.8	84.1	124	184	272	402	595	879	1300
14"(350A)	150	47.4	69.9	104	153	226	335	495	732	1082	1600
16"(400A)	150	53.3	78.7	116	172	255	376	557	823	1217	1800
18"(450A)	200	66.6	98.3	146	215	318	470	696	1029	1521	2250
20"(500A)	200	79.9	118	175	258	382	565	835	1235	1826	2700

Rated CV and Travel of Cage Guided Globe Control Valve—PM Series

01PM Series Single Cage of Low Noise
02PM Series Double Cage of Low Noise

Flow Characteristic: Linear

Travel Percentage		10	20	30	40	50	60	70	80	90	100
FL		0.94	0.94	0.93	0.93	0.92	0.92	0.91	0.91	0.90	0.90
Size(inch/mm)	Travel	Rated Cv									
1"(25A)	20	1.53	2.81	4.08	5.36	6.63	7.90	9.18	10.5	11.7	13
1 1/4"(32A)	25	2.71	4.97	7.22	9.48	11.7	14.0	16.2	18.5	20.7	23
1 1/2"(40A)	25	3.78	6.91	10.0	13.2	16.3	19.5	22.6	25.7	28.9	32
2"(50A)	25	5.90	10.8	15.7	20.6	25.5	30.4	35.3	40.2	45.1	50
2 1/2"(65A)	50	10.4	19.0	27.6	36.3	44.9	53.5	62.1	70.8	79.4	88
3"(80A)	50	14.2	25.9	37.7	49.4	61.2	73.0	84.7	96.5	108	120
4"(100A)	50	21.2	38.9	56.5	74.2	91.8	109	127	145	162	180
5"(125A)	60	34.2	62.6	91.1	119	148	176	205	233	262	290
6"(150A)	60	42.5	77.8	113	148	184	219	254	289	325	360
8"(200A)	75	75.5	138	201	264	326	389	452	515	577	640
10"(250A)	100	105	192	279	367	454	541	628	716	803	890
12"(300A)	100	142	259	377	494	612	730	847	965	1082	1200
14"(350A)	150	177	324	471	618	765	912	1059	1206	1353	1500
16"(400A)	150	212	389	565	742	918	1094	1271	1447	1624	1800
18"(450A)	200	248	454	659	865	1071	1277	1483	1688	1894	2100
20"(500A)	200	295	540	785	1030	1275	1520	1765	2010	2255	2500

01PM Series Single Cage of Low Noise
02PM Series Double Cage of Low Noise

Flow Characteristic: Equal Percentage

Travel Percentage		10	20	30	40	50	60	70	80	90	100
FL		0.94	0.94	0.93	0.93	0.92	0.92	0.91	0.91	0.90	0.90
Size(inch/mm)	Travel	Rated Cv									
1"(25A)	20	0.30	0.44	0.65	0.96	1.41	2.09	3.09	4.57	6.76	10
1 1/4"(32A)	25	0.56	0.83	1.23	1.82	2.69	3.97	5.87	8.69	12.8	19
1 1/2"(40A)	25	0.89	1.31	1.94	2.87	4.24	6.27	9.28	13.7	20.3	30
2"(50A)	25	1.33	1.97	2.91	4.30	6.36	9.41	13.9	20.6	30.4	45
2 1/2"(65A)	50	2.37	3.50	5.18	7.65	11.3	16.7	24.7	36.6	54.1	80
3"(80A)	50	2.81	4.15	6.15	9.08	13.4	19.9	29.4	43.4	64.2	95
4"(100A)	50	4.44	6.56	9.71	14.3	21.2	31.4	46.4	68.6	101	150
5"(125A)	60	7.10	10.5	15.5	22.9	33.9	50.2	74.2	110	162	240
6"(150A)	60	8.88	13.1	19.4	28.7	42.4	62.7	92.8	137	203	300
8"(200A)	75	17.2	25.3	37.5	55.4	82.0	121	179	265	392	580
10"(250A)	100	22.2	32.8	48.5	71.7	106	157	232	343	507	750
12"(300A)	100	29.6	43.7	64.7	95.6	141	209	309	457	676	1000
14"(350A)	150	39.2	57.9	85.7	127	187	277	410	606	896	1325
16"(400A)	150	44.4	65.6	97.1	143	212	314	464	686	1014	1500
18"(450A)	200	53.3	78.7	116	172	255	376	557	823	1217	1800
20"(500A)	200	68.1	101	149	220	325	481	711	1052	1555	2300

Rated CV and Travel of Cage Guided Globe Control Valve—PM Series

05 PM Series Labyrinth Trim

03, 04, 07 PM Series Multihole Multistage Trim of Pressure Reduction

Flow Characteristic: Linear

Travel Percentage		10	20	30	40	50	60	70	80	90	100
FL		0.94	0.94	0.93	0.93	0.92	0.92	0.91	0.91	0.90	0.90
Size(inch/mm)	Travel	Rated Cv									
1"(25A)	20	0.55	1.04	1.50	1.98	2.45	2.92	3.39	3.86	4.33	4.8
1 1/4"(32A)	25	0.91	1.73	2.51	3.30	4.08	4.86	5.85	6.43	7.22	8
1 1/2"(40A)	25	1.53	2.81	4.08	5.36	6.63	7.90	9.18	10.5	11.7	13
2"(50A)	25	2.71	4.97	7.22	9.48	11.7	14.0	16.2	18.5	20.7	23
2 1/2"(65A)	50	3.78	6.91	10.0	13.2	16.3	19.5	22.6	25.7	28.9	32
3"(80A)	50	5.90	10.8	15.7	20.6	25.5	30.4	35.3	40.2	45.1	50
4"(100A)	50	10.4	19.0	27.6	36.3	44.9	53.5	62.1	70.8	79.4	88
5"(125A)	60	14.2	25.9	37.7	49.4	61.2	73.0	84.7	96.5	108	120
6"(150A)	60	21.2	38.9	56.5	74.2	91.8	109	127	145	162	180
8"(200A)	75	34.2	62.6	91.1	119	148	176	205	233	262	290
10"(250A)	100	42.5	77.8	113	148	184	219	254	289	325	360
12"(300A)	100	75.5	138	201	264	326	389	452	515	577	640

03, 04, 07 PM Series Multihole Multistage of Pressure Reduction

Flow Characteristic: Equal Percentage

Travel Percentage		10	20	30	40	50	60	70	80	90	100
FL		0.94	0.94	0.93	0.93	0.92	0.92	0.91	0.91	0.90	0.90
Size(inch/mm)	Travel	Rated Cv									
1"(25A)	20	0.11	0.17	0.25	0.36	0.54	0.79	1.17	1.74	2.57	3.8
1 1/4"(32A)	25	0.18	0.26	0.39	0.57	0.85	1.25	1.86	2.74	4.60	6
1 1/2"(40A)	25	0.30	0.44	0.65	0.96	1.41	2.09	3.09	4.57	6.76	10
2"(50A)	25	0.56	0.83	1.23	1.82	2.69	3.97	5.87	8.69	12.8	19
2 1/2"(65A)	50	0.89	1.31	1.94	2.87	4.24	6.27	9.28	13.7	20.3	30
3"(80A)	50	1.33	1.97	2.91	4.30	6.36	9.41	13.9	20.6	30.4	45
4"(100A)	50	2.37	3.50	5.18	7.65	11.3	16.7	24.7	36.6	54.1	80
5"(125A)	60	2.81	4.15	6.15	9.08	13.4	19.9	29.4	43.4	64.2	95
6"(150A)	60	4.44	6.56	9.71	14.3	21.2	31.4	46.4	68.6	101	150
8"(200A)	75	7.10	10.5	15.5	22.9	33.9	50.2	74.2	110	162	240
10"(250A)	100	8.88	13.1	19.4	28.7	42.4	62.7	92.8	137	203	300
12"(300A)	100	17.2	25.3	37.5	55.4	82.0	121	179	265	392	580

Rated CV and Travel of Three Way Globe Control Valve

Flow Characteristic: Linear

Travel Percentage		10	20	30	40	50	60	70	80	90	100
FL		0.94	0.94	0.93	0.93	0.92	0.92	0.91	0.91	0.90	0.90
Size(inch/mm)	Travel	Rated Cv									
1"(25A)	20	1.53	2.81	4.08	5.36	6.63	7.90	9.18	10.5	11.7	13
1 1/4"(32A)	25	2.36	4.32	6.28	8.24	10.2	12.2	14.1	16.1	18.0	20
1 1/2"(40A)	25	3.54	6.48	9.42	12.4	15.3	18.2	21.2	24.1	27.1	30
2"(50A)	25	4.72	8.64	12.6	16.5	20.4	24.3	28.2	32.2	36.1	40
2 1/2"(65A)	50	8.26	15.1	22.0	28.8	35.7	42.6	49.4	56.3	63.1	70
3"(80A)	50	13.6	24.8	36.1	47.4	58.7	69.9	81.2	92.5	104	115
4"(100A)	50	17.7	32.4	47.1	61.8	76.5	91.2	106	121	135	150
5"(125A)	60	25.4	46.4	67.5	88.6	110	131	152	173	194	215
6"(150A)	60	37.2	68.0	98.9	130	161	192	222	253	284	315
8"(200A)	75	64.9	119	173	227	281	334	388	442	496	550
10"(250A)	100	86.7	159	231	303	375	447	519	591	663	735
12"(300A)	100	124	227	330	433	536	638	741	844	947	1050

Flow Characteristic: Equal Percentage

Travel Percentage		10	20	30	40	50	60	70	80	90	100
FL		0.94	0.94	0.93	0.93	0.92	0.92	0.91	0.91	0.90	0.90
Size(inch/mm)	Travel	Rated Cv									
1"(25A)	20	0.30	0.44	0.65	0.96	1.41	2.09	3.09	4.57	6.76	10
1 1/4"(32A)	25	0.50	0.74	1.10	1.63	2.40	3.55	5.26	7.77	11.5	17
1 1/2"(40A)	25	0.74	1.09	1.62	2.39	3.54	5.23	7.73	11.4	16.9	25
2"(50A)	25	1.07	1.57	2.33	3.44	5.09	7.53	11.1	16.5	24.3	36
2 1/2"(65A)	50	1.78	2.62	3.88	5.74	8.48	12.5	18.6	27.4	40.6	60
3"(80A)	50	2.96	4.37	6.47	9.56	14.1	20.9	30.9	45.7	67.6	100
4"(100A)	50	4.00	5.90	8.73	12.9	19.1	28.2	41.7	61.7	91.3	135
5"(125A)	60	5.62	8.30	12.3	18.2	26.9	39.7	58.7	86.9	128	190
6"(150A)	60	8.29	12.2	18.1	26.8	39.6	58.5	86.6	128	189	280
8"(200A)	75	14.8	21.9	32.4	47.8	70.7	105	155	229	338	500
10"(250A)	100	19.2	28.4	42.1	62.1	91.9	136	201	297	440	650
12"(300A)	100	28.1	41.5	61.5	90.8	134	199	294	434	642	950

Features

- Stable output of thrust with multiple springs loaded diaphragm.
- Easy assembly with compact construction of actuator.
- The diaphragm is driven by air supply pressure to surpass the reverse force of loaded springs for linear motion.
- Failure safe is ensured by the reverse force of loaded spring to return stem to original position.
- Actuator is available with direct acting and reverse acting type.

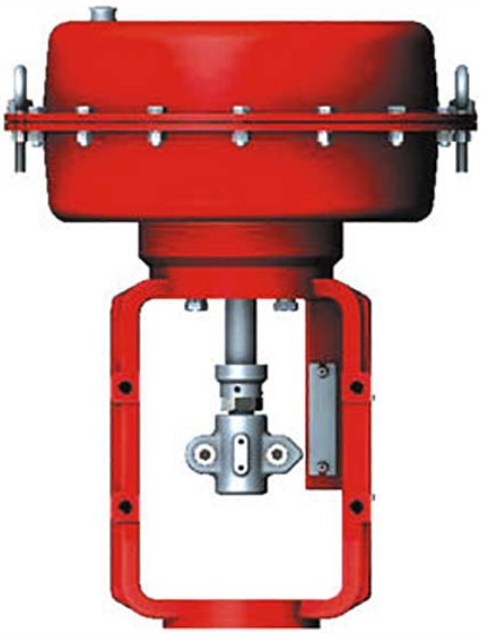

Specifications

Effective Area of Diaphragm cm²	Travel mm	Direct Acting	Reverse Acting
220	20	HA1D	HA1R
280	30	HA2D	HA2R
440	50	HA3D	HA3R
900	60	HA4D	HA4R
1200	75	HA5D	HA5R
1800	100	HA6D	HA6R

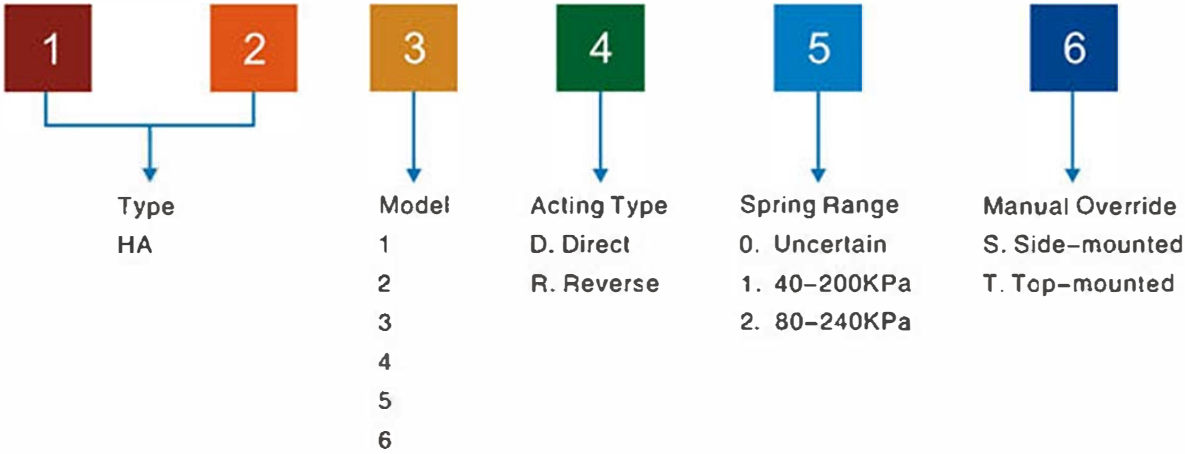
1
2
3
4
5
6
Type
HA
Model
1
2
3
4
5
6
Acting Type
D. Direct
R. Reverse
Spring Range
0. Uncertain
1. 40-200KPa
2. 80-240KPa
Manual Override
S. Side-mounted
T. Top-mounted

Dimension of HA Series Diaphragm Actuator

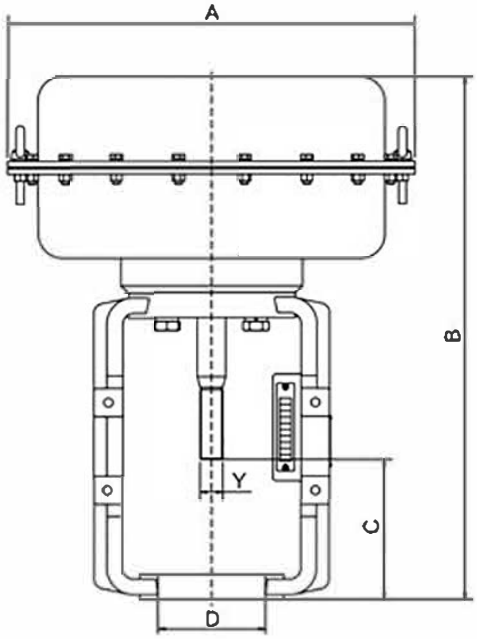

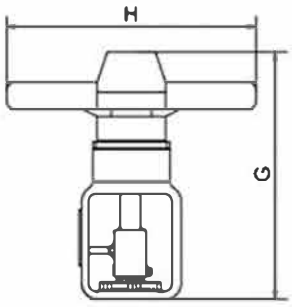

▲ Top-mounted Handwheel

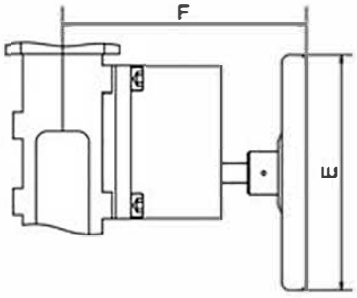

▲ Side-mounted Handwheel

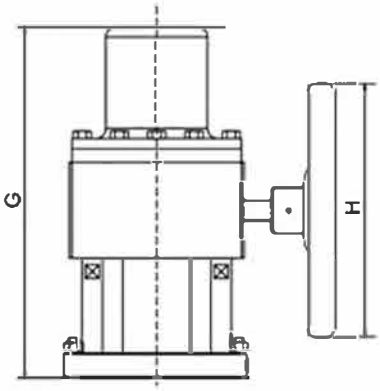

▲ 6#Top-mounted Handwheel

Installation Dimensions and Output Thrust

Model	A(mm)	B(mm)	C(mm)		D(mm)	Y(mm)	Output Thrust (N)	
			Direct	Reverse			40-200KPa	80-240KPa
HA 1	290	388	150	130	65	M14x1.5	2250	2450
HA 2	290	388	160	130	65	M14x1.5	2250	2450
HA 3	360	465	190	136	82	M18x1.5	4770	5247
HA 4	440	600	255	195	92	M24x2	7650	8415
HA 5	510	660	269	195	92	M24x2	10305	11335
HA 6	650	840	324	224	125	M30x2	17100	18810

Installation Dimensions – Top-mounted Handwheel

Model	G(mm)	H(mm)
T2	245	240
T3	245	240
T4	300	280
T5	370	350
T6	425	400

Installation Dimensions – Side-mounted Handwheel

Model	F(mm)	E(mm)
S2	230	230
S3	230	250
S4	260	300

GB/T4213-2008

Tightness Class	Testing Medium	Testing Pressure	Maximum Allowable Seat Leakage l/h
I	As specified by user or manufacturer		
II	Water, air or oxygen	A	5×10^{-3}x Rated Flow Capacity
III			10^{-3}x Rated Flow Capacity
IV	Water	A or B	10^{-4}x Rated Flow Capacity
	air or oxygen	A	
IV-S1	Water	A or B	5×10^{-4}x Rated Flow Capacity
	air or oxygen	A	
IV-S2	air or oxygen	A	$20\times10^{-4}\times\Delta P\times D$
V	Water	B	$1.8\times10^{-7}\times\Delta P\times D$
V1	air or oxygen	A	$3\times10^{-3}\times\Delta P$x(Leakage Table is followed)

Leakage Volume

Seat Size		20	25	40	50	65	80	100	150	200	250	300	350	400
Leakage	ml/min	0.1	0.15	0.3	0.45	0.6	0.9	1.7	4.0	6.75	11.1	16.0	21.6	26.4
	Bubble Number/min	/	1	2	3	4	6	11	27	45	/	/	/	/

Remark: A: Testing pressure is 3.5bar or the maximum allowable differential pressure of valve whichever is lower.
B: Maximum differential pressure of valve as the testing pressure

ANSI B16.104-1976

Tightness Class	Maximum Allowable Leakage	Testing Medium	Testing Pressure
II	0.5%Cv	Air or water of 10-52℃	Testing pressure is 3.5bar or the maximum allowable differential pressure of valve whichever is lower.
III	0.1%Cv	Air or water of 10-52℃	
IV	0.01%Cv	Air or water of 10-52℃	
V	Allowable leakage is 0.0005ml/min per inch of size and per pound/in²of differential pressure	Water of 10-52℃	Maximum differential pressure of valve
VI	Valve Size	Air or water of 10-52℃	Testing pressure is 3.5bar or the maximum allowable differential pressure of valve whichever is lower.

In	mm	Ml/min	Bubble Number/min
1	25	0.15	1
11/2	38	0.30	2
2	51	0.45	3
21/2	64	0.60	4
3	76	0.90	6
4	102	1.70	11
6	152	4.00	27
8	203	6.75	45
10	250	11.1	
12	300	16.0	
14	350	21.6	
16	400	28.4	

KV Controls (PTY) Ltd. Reg No: 2016/378940/07
KV CONTROLS
Control & Isolation Valves

Appendix Ⅲ. Main Valve Boby Material

Material name	ASTM	JIS	DIN	GB	Main chemical composition
Carbon steel(cast)	WCA、WCB、WCC	SCPH2	1.0501	WCA、WCB、WCC	C:≤0.30
Cr-Mo steel(cast)	WC 6 WC9	SCPH21 SCPH32	1.7335	15CrMo 15Cr2MoV	C:≤0.20 C:≤0.18
Stainless steel(cast)	CF 8	SCP13 SCP13A	1.4308	CF8(GB12230)	C:≤0.08 Cr:18.0-21.0
	CF8M	SCS14 SCS14A	1.4580 1.4581	CF8M(GB12230)	C:≤0.08 Cr:18.0-21.0 Mo:2.0-3.0
	CF 3	/	1.4306	CF3(GB1223)	C:≤0.03 C:17.0-21.0
	CF3M	/	1.4435	CF3M(GB12230)	C:≤0.03 Cr:17.0-21.0
Stainless steel(rod)	304	SUS304	1.4301	OCr18Ni9	C:≤0.08 Cr:17.0-20.0
	316	SUS316	1.4401 1.4436	OCr17Ni12M02	C:≤0.08 Cr:16.0-18.0 Mo:2.0-3.0
	304L	SUS304L	1.4036	OOCr19NI10	C:≤0.03 Cr:18.0-20.0
	316L	SUS316L	1.4435 1.4404	OOCr17Ni14Mo2	C:≤0.03 Cr:2.0-3.0
	410	SUS410	1.4006	1Cr13	C:≤0.15 Cr:11.5-13.0
	416	SUS416	1.4005	YICr13	C:≤0.15 Cr:12.0-14.0
	420	SUS420	1.4021	2Cr13	C:0.16-0.25 C:16.0-18.0
	440B	SUS440B	1.4112	9Cr18Mov	C:0.75-0.95 C:16.0-18.0
	440C	SUS440C	1.4125	9Cr18	C:0.75-0.95 C:16.0-18.0
	630	SUS630 SUS24 cast	1.4542	OCr17Ni4Cu4Nb (17-4PH)	Cr:16.5 Ni:4.0 Cu:3.5

Appendix Ⅳ. Selection of Material

Fluid	Material													
	Carbon steel	Cast iron	SS302 or 304	SS316	Bronze	Monel	Hastelloy B	Hastelloy C	Stainless Steel #20	Titanium	Cobalt-chromium alloy #6	SS416	SS440C	17-4PH
Sodium hydroxide	A	A	A	A	A	A	A	A	A	A	A	B	B	A
Sodium hypochlorite	C	C	C	C	B-C	B-C	C	A	B	A	I.L	C	C	I.L
Sodium thiosulfate	C	C	A	A	C	C	A	A	A	A	I.L	B	B	I.L
Stannous chloride	B	B	C	A	C	B	A	A	A	A	I.L	C	C	I.L
Stearic acid	A	C	A	A	B	B	A	A	A	A	A	B	B	I.L
Sulfate liquor(black)	A	A	A	A	C	A	A	A	A	A	A	I.L	I.L	I.L
Sulfur	A	A	A	A	C	A	A	A	A	A	A	A	A	A
Sulfur dioxide(dry)	A	A	A	A	A	A	B	A	A	A	A	B	B	I.L
Sulfur trioxide(dry)	A	A	A	A	A	A	B	A	A	A	A	B	B	I.L
Sulfuric acid(aerated)	C	C	C	C	C	C	A	A	A	B	B	C	C	C
Sulfuric acid(air free)	C	C	C	C	B	B	A	A	A	B	B	C	C	C
Sulfurous acid	C	C	B	B	B	B	A	A	A	A	A	C	C	I.L
Tar	A	A	A	A	A	A	A	A	A	A	A	A	A	A
Trichloroethylene	B	B	B	A	A	A	A	A	A	A	A	B	B	I.L
Turpentine	B	B	A	A	A	B	A	A	A	A	A	A	A	A
Vinegar	C	C	A	A	C	A	A	A	A	I.L	A	C	C	A
Water(water feed)	B	C	A	A	A	A	A	A	A	A	A	B	A	A
Water(distilled)	A	A	A	A	B	A	A	A	A	A	A	B	B	I.L
Sea water	B	B	B	B	B	A	A	A	A	A	A	C	C	I.L
Whiskey and wines	C	C	A	A	A	B	A	A	A	A	A	C	C	I.L
Zinc chloride	C	C	C	C	C	C	A	A	A	A	B	C	C	I.L
Zinc sulfate	C	C	A	A	B	A	A	A	A	A	A	B	B	I.L

Remark:
A-Material is able to meet requirement or at satisfactory service;
B-Attention is required by using this material;
C-Material is unable to meet the requirement;
I.L- No reference available.
Above content on material selection is quoted from 2nd edition of Control Valve Manual from chief editor Mr.J.W. Hutcheson from American Instrument Institution and interpreted by Qiuhong Liu in December 1984.
This table can be referred for selection of material with which the contact of other substance would generate chemical reaction.
The recommendation on the table can not be taken as absolutely correct since the corrosive resistance of material is related with many factors including concentration, temperature, pressure and impurity etc.
Therefore, this table can only be referred as guideline.

PP	050	F1	—	W	C	36	Y	36	W	—	SRK
1	2	3		4	5	6	7	8	9		10

1 Valve Type

Single Seated Series		Cage Guided Series	
PP	Standard Single Seated Type	PW	Standard Cage Guided Type
01 PP	Single Cage of Low Noise	01 PW	Single Cage of Low Noise
02 PP	Double Cage of Low Noise	02 PW	Double Cage of Low Noise
03 PP	Trim for Low Flow Rate	03 PW	Multi-hole and Multistage Plating Trim
04 PP	Trim for Low Flow Rate	04 PW	Multi-hole and Multistage Trim
		05 PW	Labyrinth Type
Three-way Port Type		06 PW	Pressure Relief Trim Type
PT	Three-way Converging Type	07 PW	Plunger Trim of Multistage Pressure Reduction
PX	Three-way Diverging Type	08 PW	Plunger Trim of Multistage Pressure Reduction

3 End Connection Type

F1	RF Faced Flange
F2	MF Faced Flange
B1	Butt Welding

4 Pressure Rating

GB(National Standard)		ANSI		JIS	
10	PN 10	01	150 Lb	1K	10K
16	PN 16	03	300 Lb	2K	20K
25	PN 25	06	600 Lb	3K	30K
40	PN 40	09	900 Lb	4K	40K
64	PN 64	15	1500 Lb		
80	PN 100				
90	PN 160				

2 Nominal Diameter

GB(National Standard) / ANSI					
015	DN 15	1/2"	080	DN 80	3"
020	DN 20	3/4"	100	DN 100	4"
025	DN 25	1"	126	DN 125	5"
032	DN 32	1-1/4"	150	DN 150	6"
040	DN 40	1-1/2"	200	DN 200	8"
050	DN 50	2"	250	DN 250	10"
065	DN 65	2-1/2"	300	DN 300	12"
080	DN 80	3"	350	DN350	14"

5 Body Material

Material			
P	CF 8	C	WC B
Q	CF 3	B	LCB
M	CF8M	D	LCC
L	CF3M	W	WC 6
G	CG8M		

6 Trim Material and Surface Treatment

Trim Material				Surface Treatment	
2	410	6	316L	0	Polish
3	304	7	317	1	Hard Chrome Plating
4	304L			3	Spray Welding of Nickel Based Alloy
5	316			4	Spray Welding of Tungsten Carbide
				5	Nitriding
				6	Overlay Welding of Stellite

7 Seat Sealing Type

Standard Metal Seated	Y
Metal Seated for High Temperature	G
Soft Seated	R

9 Material of Balanced Sealing Ring

PP Series Single Seated Globe Control Valve	W	/	/
PM Series Cage Guided Globe Control Valve	R	Star-shaped Type in NBR	-20~80℃
	V	Star-shaped Type in Viton	-20~150℃
	P	PTFE sealing ring with spring	-40~230℃
	G	Graphite	-40~450℃

8 Seat Material and Surface Treatment

Metal Seated				Soft Seated	
Seat Material		Surface Treatment		Material	
2	410	0	Polish	PO	PTFE
3	304	1	Hard Chrome Plating	RO	RTFE
4	304L	2	Spray Welding of Nickel Based Alloy	NO	NYLON
5	316	3	Spray Welding of Tungsten Carbide	LO	PPL
6	316L	4	Nitriding	KO	PEEK
7	317	5	Overlay Welding of Stellite		
		6	Trim Material and Surface Treatment		

10 Actuation

SRK	Pneumatic Diaphragm Fail to Close
SRB	Pneumatic Diaphragm Fail to Close
ZK	Electric Motor

Wide industrial application range served by Linuo product including
Chemical/Etrochemical /Oil & Gas/Pulp & Paper /Biochemistry/Pharmaceutical /Water/Mining

KV CONTROLS

Control & Isolation Valves

46 Mercury Street
Naledi Industrial Park
Vaalpark
Tel: +27 (0) 16 100 4592
www.kvcontrols.co.za

KV Controls (PTY) Ltd. Reg No: 2016/378940/07